SIEMENS

Operating Instructions

Semi-Automatic Star Delta Starter

Our new SASD -11 starter complies with the latest standards IS13947 and IEC947

For dependable service, it is of utmost importance that instructions given below are followed for selection, inspection, installation, commissioning, operation and maintenance.

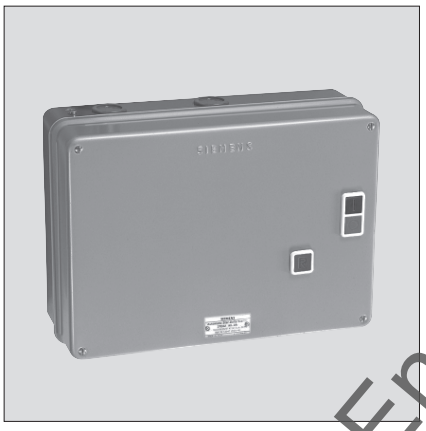

Fig. 1 : SASD-11 Starter

Selection:

- Refer Table 1 for recommended selection of SASD starters.
- Select Back-up fuse rating for different starters from the selection tables. The recommendation of the fuses and fuse switches is according to Type-2 co-ordination as per IS-13947 (Part 4 / Sec 1) and IEC947-4-1.

Inspection:

- Remove the Housing Cover.
- Ensure that the relay range and coil voltage are as per your requirement.
- Inspect interior for breakage.
- If you find a serious defect, do not use the product but have it checked by an authorized Siemens dealer or an electrician.

Installation:

- Remove the front cover.
- Mount the starter on a vertical wall / plate free from vibrations with proper nuts and bolts. Refer fig. 9 for mounting dimensions and fig. 4 for permissible displacement.
- Remove the rubber grommets for the incoming and outgoing cable connections.
- Connect incoming and outgoing cables as follows (Refer fig. 3):
  - Use proper cable glands to ensure dust proofing. For conduit entry use packed washers.
  - Select correct size of cables from Table-1

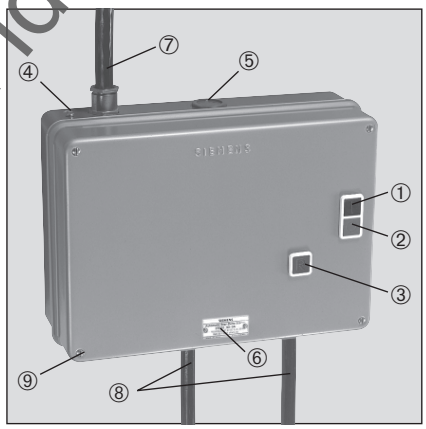

Fig. 2 : Starter Front View

① ON Push Button
② OFF Push Button
③ RESET Push Button
④ Earthing Screws
⑤ Rubber Grommets
⑥ Name Plate
⑦ Incoming Cable
⑧ Outgoing Cables
⑨ Cover Fixing Screws

Warning:

Hazardous Voltage can cause Electric Shock and burns.
Disconnect Power before proceeding with any work on this equipment

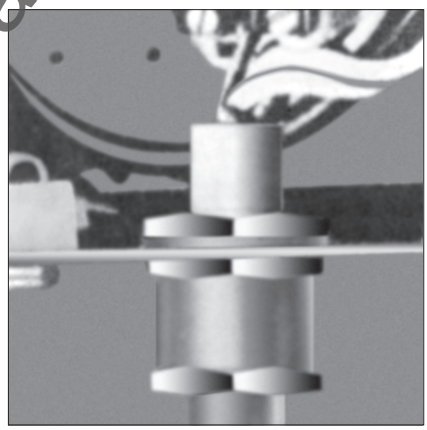

Fig. 3 : Cable Connections

  - Connect line and motor leads exactly as per wiring diagram pasted inside the cover of the starter.
  - Terminate the incoming cable on the terminal block. Terminal Screws : M5; Tightening torque : 150 – 210 Ncm.
  - Connect outgoing cables on the Relay (K1) terminals and Delta Contactor (Q3) terminal. Terminal Screws: M4; Tightening torque : 80 – 110 Ncm.
- Connect the earthing conductor to terminals marked ⏚ (earth) on the starter body.

The Starter in now ready for commissioning.

Commissioning:

Read the caution note carefully before commissioning.

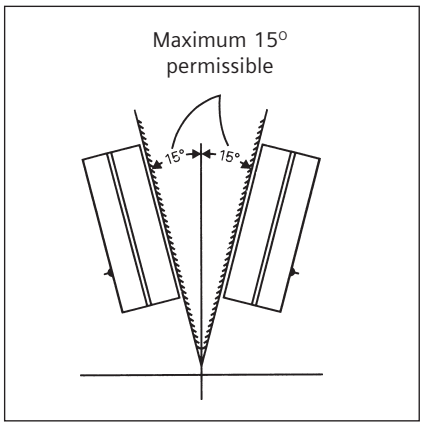

Fig. 4 : Maximum permissible displacement from vertical plane

- Initially set the overload relay to 0.58 times the rated motor current.

For exact setting of overload relay, follow the instructions given below :

Before switching ON recheck all external connections

- Starting procedure of motor :
  - First start the motor by pressing the 'ON' button shown in fig.2 and hold it for 8-10 sec. Then leave the 'ON' button. Motor will automatically change in to 'Delta' connection.
  - Measure the time taken by the motor to nearly reach rated speed or steady state current condition (indicated when the motor reaches a steady hum).
  - Stop the motor.
- Overload relay setting:
  - For closer protection set the overload relay to actual phase current as measured by an ammeter. In the absence of an ammeter, use the procedure given below:
  - Start the motor and let it run for 30 mins. Then gradually reduce the relay setting till it trips. Set the relay at a slightly higher value than this setting.
  - Overload relay characteristics shown in fig.6 can be used to estimate the average tripping time at different multiples of set current.
  - Allow a reset time of approx. 4 min. before pressing the blue knob on the relay to reset it.

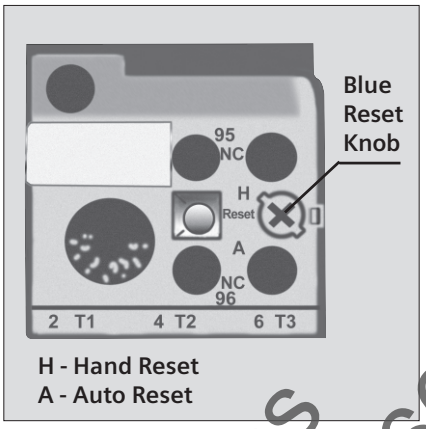

Fig. 5 : Relay Front View

  - Re-start the motor after some time. If the relay does not trip then consider it to be properly set. If it trips, set at a little higher value than before and recheck.
- Fix the front cover.

Caution:

- **During commissioning or maintenance always ensure that the main supply is disconnected by switching off the main switch.**
- **In the case of SASD starters under no circumstances should the relay be set higher than the phase current i.e. 0.58 times the rated current on the motor nameplate.**
- **If the relay trips even when set at the rated motor current the suitability of the starter/relay for the particular application should be checked with the nearest Siemens office.**

Operating Characteristics:

The given characteristics (fig. 6) are average values of all ranges and sizes of bimetal relays and are mainly intended to indicate the inverse time current characteristics of the same. The tripping times shown are for relays starting from the cold state. At operating temperatures (heated at rated current) these are reduced to about 25% of the value obtained from the characteristics.

Operation:

- For starting the motor, press Green push button marked 'I' (fig. 2), hold it for 6-8 sec (starting time of the motor). Then leave the 'ON' button. Motor will automatically change into 'Delta' connection from 'Star' connection.
- For stopping the motor press Red push button marked 'O' (fig. 2).

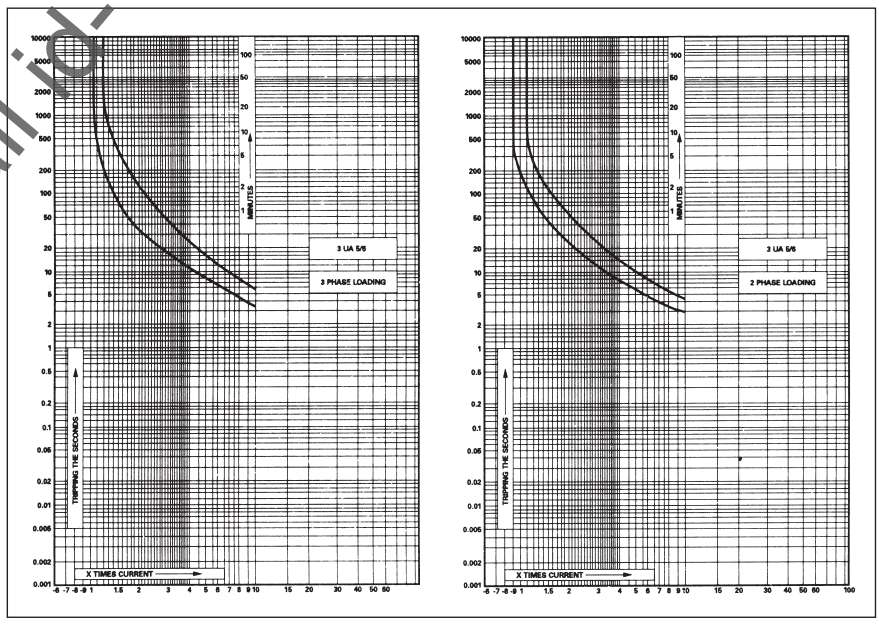

Fig. 6 : Operating characteristics of 3UW50 relays

- In case you want the starter to be in 'Self-Reset' mode, the blue knob on the relay is to be pressed and rotated in the anti-clockwise direction, so that it comes in position 'A', and its edge is flush with the surface. In this mode even if the relay trips on overload, it will be automatically reset in a maximum of 4 minutes. The motor can be restarted only after the relay is reset (Fig. 5).
- In hand reset mode for resetting, press Blue button marked 'R' if the relay has tripped due to overload. In this case the motor can be restarted only after you reset the relay. Allow a minimum time of 4 mins. Before resetting it.

Maintenance:

- Keep the interior dust free.
- Re-tighten the terminal screws from time to time.
- No maintenance is needed for overload relay. Please do not open the relay.
- Blackening of silver/alloyed contacts does not affect operational life. If necessary, clean the contacts of contactor with CRC 2-26. Remove the globules with a scrapper or a screw-driver with minimal force. Under no circumstances should the contacts be filed or dressed as it will reduce the electrical life drastically.
- If the contactor hums, clean the magnet poles with a soft cloth.
- Replace contacts of the contactor if they are severely pitted or when only 40% of the original contact tip remains. For details of contactor maintenance refer to our 'Guide to Contactor Installation & Maintenance'.
- Replacement of Overload Relay (Refer Fig. 7 & 8) :
  - Removal
    1. Disconnect the wires connected to the relay terminals.
    2. Slightly loosen the outgoing terminal screws of the line contactor.

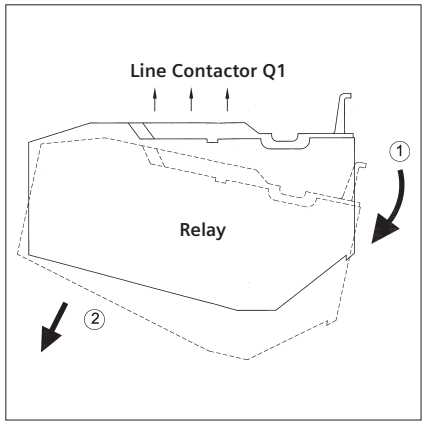

Fig. 7 : Relay Removal

    3. Follow instructions given in Fig. 7 for removal of relay.
  - Refixing
    1. Select a proper relay exactly as per the original.
    2. Connect the relay terminals (L1,L2,L3) to (T1,T2,T3) of Q1 line contactor
    3. Refer Fig. 8 for details.

Care should be taken to fix the relay terminals in the exact position shown in Fig. 8

    4. Ensure that the relay hook is engaged in the slot on the base plate.
    5. Tighten the contactor terminal screws.
    6. Re-connect the disconnected wires and check connections by referring to the wiring diagram.

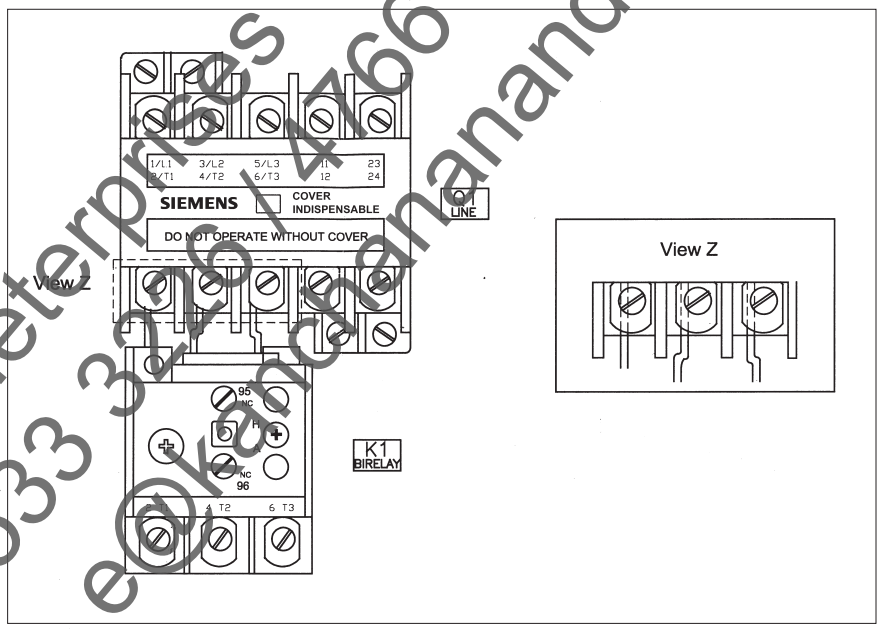

Fig. 8 : Relay Refixing

Table 1 **Semi-Automatic Star-Delta Starter Type Ref: 3TS02 90-0A****

Motor Output at 415V (KW/HP)	I(fl) 4Pole squirrel cage motor Line Current IS 8789/9283 (A)	I(fl) 4Pole squirrel cage motor Phase Current IS 8789/9283 (A)	Contactor Line Type Reference 1)	Contactor Star/Delta Type Reference 1)	Recommended over load relay at 50°C Type	Recommended over load relay at 50°C Range (A)	Recommended Fuse switch Type	Recommended Fuse switch Back up HRC fuse Rating (A)	Recommended Cu cable size (mm²) Incoming (from supply)	Recommended Cu cable size (mm²) Outgoing (to motor)
7.5/10	15.4	8.8	3TW0 320-0A*51	3TW0 311-0A*51	3UW5 002-**	6-3-10	3KL47	25	4	2.5
9.3/12.5	19.5	11.2	3TW0 320-0A*51	3TW0 311-0A*51	3UW5 002-**	8-12.5	3KL47	25	4	2.5
11/15	23	13.2	3TW0 320-0A*51	3TW0 311-0A*51	3UW5 002-**	10-16	3KL49	32	4	2.5
15/20	32	18.4	3TW0 320-0A*51	3TW0 311-0A*51	3UW5 002-**	12.5-20	3KL49	50	10	4
18.5/25	38.5	22.2	3TW0 320-0A*51	3TW0 311-0A*51	3UW5 002-**	16-25	3KL50	50	10	4
Submersible Pump ratings :										
7.5/10	19.5	11.2	3TW0 320-0A*51	3TW0 311-0A*51	3UW5 002-**	8-12.5	3KL47	25	4	2.5
9.3/12.5	25	14.4	3TW0 320-0A*51	3TW0 311-0A*51	3UW5 002-**	10-16	3KL49	32	4	2.5
11/15	29	16.7	3TW0 320-0A*51	3TW0 311-0A*51	3UW5 002-**	12.5-20	3KL49	50	10	4
			* (Refer Table 2 for voltage codes)		** (Refer Table 3 for codes)					

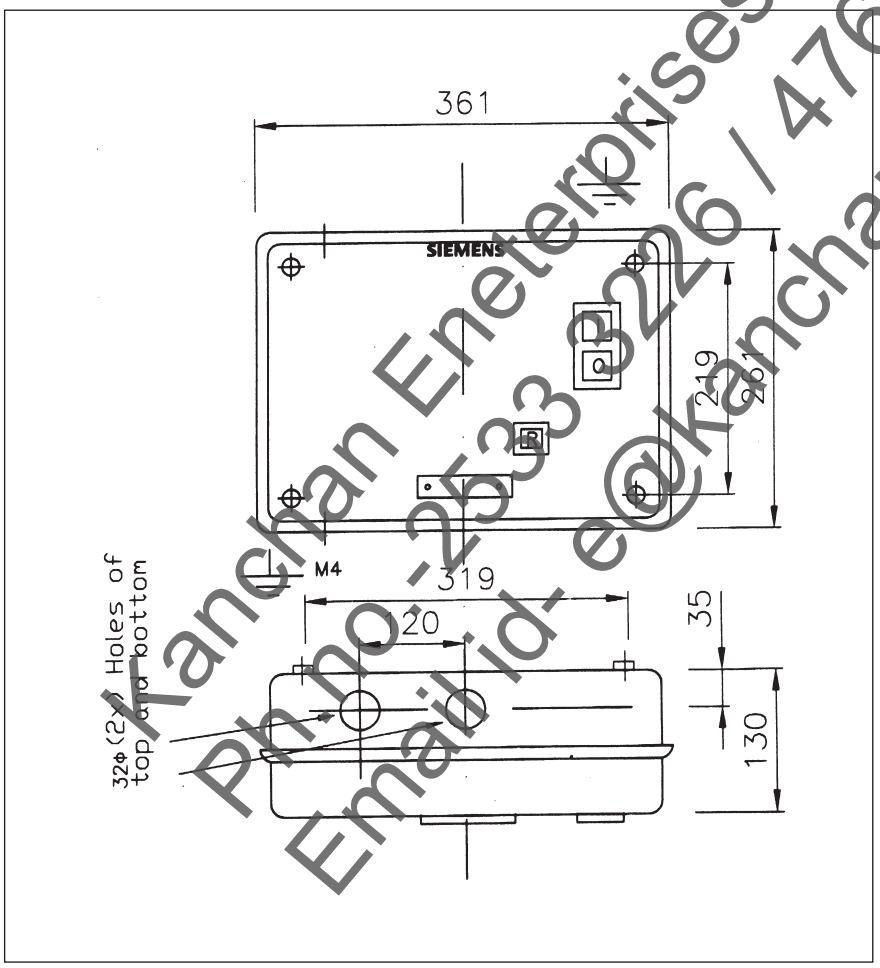

Table 2

Coil Voltage	MLFB
230V-400V	D
415V	W

Table 3

Relay Range (A)	Code
6.3 - 10	1J
8 - 12.5	1K
10 - 16	2A
12.5 - 20	2B
16 - 25	2C

Table 4

Star-Delta Timer	
Input Voltage	**Item No**
230V-415V	2115730 001

Fig. 9 : Dimensional Details